Energizer®

3D CATALOGUE

INSIGHTS: CHECKOUTS / FRONT END

Significant incremental sales for category:
UP TO 15%
in food channel when placed 100% checkouts*

Batteries =
HIGH UNIT MARGIN IN A MINIMUM SPACE

CHECKOUT = NO.1 PREFERRED SHOPPER LOCATION
for batteries in all channels**

Last opportunity to catch non-listed
PROMPTED PURCHASE

Opportunity for
HIGHER VALUE PRODUCTS

QUALITY OF PLACEMENT
makes a big difference

*Test & Roll out in Food channel (IRI & Nielsen).
**Brand potential : 3000 interviews EU April 2014.

EU HORIZONTAL 5X1 WITH MAGNETIC MOUNT

SAP
DISPLAY:
688793
SUPPLIER:
INNERWORKING

360°

BASIC UNIT		
Single pack (1 row)	AA	6
	AAA	8
Single pack (2 rows)	AA	3
	AAA	4
SPECIALITY		
CR2032	18	

	WEIGHT	HEIGHT	WIDTH	DEPTH
	1.6kg	22.7cm	52.4cm	14.9cm
	2.2kg	8.5cm	73cm	25cm

	ROW	COLUMN	TOTAL
4in 10cm	1	5	5

EU HORIZONTAL 5X1 WITH GONDOLA MOUNT

SAP
DISPLAY:
688804
SUPPLIER:
INNERWORKING

360°

BASIC UNIT		
Single pack (1 row)	AA	6
	AAA	8
Single pack (2 rows)	AA	3
	AAA	4
SPECIALITY		
CR2032	18	

	WEIGHT	HEIGHT	WIDTH	DEPTH
	1.8kg	29.4cm	52.4cm	14.9cm
	2.2kg	11cm	73cm	30cm

	ROW	COLUMN	TOTAL
4in 10cm	1	5	5

EU VERTICAL 2X3 WITH MAGNETIC MOUNT

SAP
DISPLAY:
688808
SUPPLIER:
INNERWORKING

360°

BASIC UNIT		
Single pack (1 row)	AA	6
	AAA	8
Single pack (2 rows)	AA	3
	AAA	4
SPECIALITY		
CR2032	18	

	WEIGHT	HEIGHT	WIDTH	DEPTH
	2kg	51.9cm	27.4cm	19.2cm
	2.8kg	10cm	70cm	33cm

	ROW	COLUMN	TOTAL
4in 10cm	3	2	6

EU VERTICAL 2X3 WITH POLE HANGING MOUNT

SAP
DISPLAY:
688810
SUPPLIER:
INNERWORKING

360°

BASIC UNIT		
Single pack (1 row)	AA	6
	AAA	8
Single pack (2 rows)	AA	3
	AAA	4
SPECIALITY		
CR2032	18	

	WEIGHT	HEIGHT	WIDTH	DEPTH
	2.8kg	51.9cm	27.4cm	31.2cm
	3.3kg	15cm	55cm	33cm

	ROW	COLUMN	TOTAL
4in 10cm	3	2	6

EU CLIPSTRIP METAL DEEP 6X1

SAP
DISPLAY:
688704
MAGNETIC MOUNT:
688258
SUPPLIER:
INNERWORKING

360°

BASIC UNIT		
Single pack (1 row)	AA	8
	AAA	10
Single pack (2 rows)	AA	4
	AAA	5
SPECIALITY		
CR2032	22	

	WEIGHT	HEIGHT	WIDTH	DEPTH
	1kg	87.6cm	11.3cm	19cm
	1.2kg	85cm	11cm	8.5cm

	ROW	COLUMN	TOTAL
5in 12.5cm	6	1	6

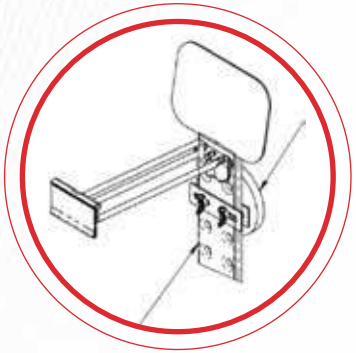

EU HORIZONTAL 4X1 WITH MAGNETIC MOUNT

SAP
DISPLAY:
688790
SUPPLIER:
INNERWORKING

360°

BASIC UNIT			
Single pack (1 row)		AA	6
		AAA	8
Single pack (2 rows)		AA	3
		AAA	4
SPECIALITY			
CR2032		18	

	WEIGHT	HEIGHT	WIDTH	DEPTH
	2.5kg	15.3cm	44.8cm	36.2cm
	3kg	8cm	60cm	40cm

	ROW	COLUMN	TOTAL
4in 10cm	1	4	4

EU HORIZONTAL 4X2 WITH MAGNETIC MOUNT

SAP
DISPLAY:
688792
SUPPLIER:
INNERWORKING

360°

BASIC UNIT			
Single pack (1 row)		AA	6
		AAA	8
Single pack (2 rows)		AA	3
		AAA	4
SPECIALITY			
CR2032		18	

	WEIGHT	HEIGHT	WIDTH	DEPTH
	2.4kg	26.1cm	45.2cm	16cm
	3.1kg	8cm	70cm	30cm

	ROW	COLUMN	TOTAL
4in 10cm	2	4	8

EU HORIZONTAL 4X2 WITH ANTENNA MOUNT DOUBLE SIDED

SAP
DISPLAY:
688791
SUPPLIER:
INNERWORKING

360°

BASIC UNIT		
Single pack (1 row)	AA	6
	AAA	8
Single pack (2 rows)	AA	3
	AAA	4
SPECIALITY		
CR2032	18	

	WEIGHT	HEIGHT	WIDTH	DEPTH
	9.8kg	101.6cm	41.2cm	36.9cm
	10.6kg	20cm	83cm	40cm

PER SIDE (2 SIDES)	ROW	COLUMN	TOTAL
4in 10cm	2	4	8

EU HORIZONTAL 4X2 WITH UNIVERSAL MOUNT

SAP
DISPLAY:
688798
SUPPLIER:
INNERWORKING

360°

BASIC UNIT		
Single pack (1 row)	AA	6
	AAA	8
Single pack (2 rows)	AA	3
	AAA	4
SPECIALITY		
CR2032	18	

	WEIGHT	HEIGHT	WIDTH	DEPTH
	2.8kg	26.1cm	45.2cm	22cm
	3.5kg	8cm	70cm	30cm

	ROW	COLUMN	TOTAL
4in 10cm	2	4	8

EU HORIZONTAL 4X2 WITH COUNTERTOP BASE

SAP
DISPLAY:
688795
SUPPLIER:
INNERWORKING

360°

BASIC UNIT		
Single pack (1 row)	AA	6
	AAA	8
Single pack (2 rows)	AA	3
	AAA	4
SPECIALITY		
CR2032	18	

	WEIGHT	HEIGHT	WIDTH	DEPTH
	2.7kg	38.6cm	45.8cm	20.1cm
	3.3kg	15cm	60cm	40cm

	ROW	COLUMN	TOTAL
4in 10cm	2	4	8

EU VERTICAL 2X4 WITH MAGNETIC MOUNT

SAP
DISPLAY:
688809
SUPPLIER:
INNERWORKING

360°

BASIC UNIT		
Single pack (1 row)	AA	6
	AAA	8
Single pack (2 rows)	AA	3
	AAA	4
SPECIALITY		
CR2032	18	

	WEIGHT	HEIGHT	WIDTH	DEPTH
	2kg	51.5cm	20.7cm	22cm
	2.5kg	10cm	55cm	25cm

	ROW	COLUMN	TOTAL
4in 10cm	4	2	8

EU VALUE FLOORSTAND SPINNER 3 SIDED

SAP
DISPLAY:
688806
SUPPLIER:
INNERWORKING

360°

BASIC UNIT		
Single pack (1 row)	AA	3
	AAA	4
Single pack (2 rows)	AA	1
	AAA	2
SPECIALITY		
CR2032	9	

	WEIGHT	HEIGHT	WIDTH	DEPTH
	16.1kg	141.7cm	38.6cm	38.6cm
	19.2kg	145cm	42cm	42cm

PER SIDE (3 SIDES)	ROW	COLUMN	TOTAL
2in 5cm	8	2	16

INSIGHT: PERMANENT MULTISITING

UP TO 20% CATEGORY TURNOVER

can be generated from multi-siting of Batteries in Hypermarkets*

- 40% Battery category purchases triggered in-store, ie not on shopping list***
- 80% battery purchases made as part of a regular or top up shopping trip**

1ST PRIORITY:

PLACEMENTS IN GROCERY & HIGH TRAFFIC LOCATIONS

drive biggest source of volumes**

ONE BATTERY CENTER IN MAIN TRAFFIC FLOW

is an alternative to multiple locations in grocery

2ND PRIORITY:

"NEXT TO BATTERY OPERATED DEVICES"

is in top 3 preferred locations for shoppers to find batteries**

PERMANENT PLACEMENT IN TOY SECTION

is biggest source of volumes for cross-selling***

PERMANENT PLACEMENT IN CONSUMER ELECTRONICS SECTION

is 2nd biggest source of volumes for cross-selling***

A vast majority of fast growing new connectable devices

(SMART HOME, SMART HEALTH)

use primary or specialty batteries...
another opportunity for incremental sales!

*Source of sales by location outside peak season within HM banner with full multi-siting programme (Nielsen).
**Tagging study 8 HM.
***Brand Potential : 3000 interviews EU April 2014.

EU VALUE FLOORSTAND MEDIUM, 1 SIDED

SAP
DISPLAY:
688787
SUPPLIER:
INNERWORKING

360°

BASIC UNIT		
Single pack (1 row)	AA	14
	AAA	18
Single pack (2 row)	AA	7
	AAA	9
9V	12	
C	8	
D	6	

	WEIGHT	HEIGHT	WIDTH	DEPTH
	17.7kg	165.1cm	58.4cm	39.4cm
	21.2kg	9.5cm	137cm	60.5cm

	ROW	COLUMN	TOTAL
8in 21cm	8	5 or 6*	40 or 48

*You can have an extra column on the display by adding the 8' Fast Flip Scan Hook Kit 640478

EU VALUE FLOORSTAND SMALL, 1 SIDED

SAP
DISPLAY:
688788
SUPPLIER:
INNERWORKING

360°

BASIC UNIT		
Single pack (1 row)	AA	14
	AAA	18
Single pack (2 row)	AA	7
	AAA	9
9V	12	
C	8	
D	6	

	WEIGHT	HEIGHT	WIDTH	DEPTH
	15kg	165.1cm	43.8cm	39.4cm
	17.8kg	10cm	136cm	42cm

	ROW	COLUMN	TOTAL
8in 21cm	8	3 or 4*	24 or 32

*You can have an extra column on the display by adding the 8' Fast Flip Scan Hook Kit 640478

EU VALUE SIDEKICK XSMALL

SAP
DISPLAY:
688807
SUPPLIER:
INNERWORKING

360°

BASIC UNIT		
Single pack (1 row)	AA	10
	AAA	14
Single pack (2 row)	AA	5
	AAA	7
9V	8	
C	6	
D	4	

	WEIGHT	HEIGHT	WIDTH	DEPTH
	3.5kg	86cm	19.1cm	25.9cm
	4.4kg	25.7cm	78.5cm	22cm

	ROW	COLUMN	TOTAL
6in 15cm	5	2	10

EU VALUE SIDEKICK XSMALL - EXTENSION

SAP
DISPLAY:
688839
SUPPLIER:
INNERWORKING

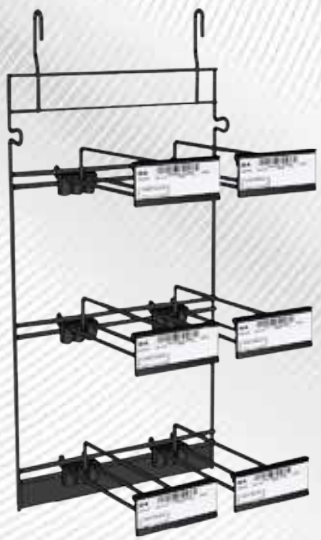

360°

BASIC UNIT		
Single pack (1 row)	AA	10
	AAA	14
Single pack (2 row)	AA	5
	AAA	7
9V	8	
C	6	
D	4	

	WEIGHT	HEIGHT	WIDTH	DEPTH
	1.5kg	49.9cm	19.1cm	19.2cm
	2.1kg	7cm	51cm	20cm

	ROW	COLUMN	TOTAL
6in 15cm	3	2	6

EU VALUE COUNTERTOP MEDIUM

SAP
DISPLAY:
688786
SUPPLIER:
INNERWORKING

360°

BASIC UNIT		
Single pack (1 row)	AA	10
	AAA	14
Single pack (2 row)	AA	5
	AAA	7
9V	8	
C	6	
D	4	

	WEIGHT	HEIGHT	WIDTH	DEPTH
	2.8kg	53.5cm	26.5cm	18.5cm
	3.1kg	8.5cm	68.5cm	27.5cm

	ROW	COLUMN	TOTAL
6in 15cm	3	2	6

EU 6 FACING METAL CLIPSTRIP

SAP
DISPLAY (CARTON OF 1)*
688704
(CARTON OF 10)
688780
SUPPLIER:
INNERWORKING

*By reworking at K&N from x 10

360°

BASIC UNIT		
Single pack (1 row)	AA	9
	AAA	10
Single pack (2 row)	AA	4
	AAA	5
9V	8	
C	6	
D	4	

	WEIGHT	HEIGHT	WIDTH	DEPTH
	1kg	87.6cm	11.3cm	19cm
x1	1.2kg	85cm	11cm	8.5cm
x10	11kg	6cm	83cm	41cm

	ROW	COLUMN	TOTAL
5in 12.5cm	6	1	6

Hooks can be moved to accomodate also Flashlight and Charger.

EU PLASTIC CLIPSTRIP ADJUSTABLE, 25X

SAP
DISPLAY
(CARTON OF 25)
688785
SUPPLIER:
INNERWORKING

360°

BASIC UNIT	
AA	12
AAA	12
9V	12
C	12
D	12

	WEIGHT	HEIGHT	WIDTH	DEPTH
	0.04kg	78.1cm	10.8cm	0.2cm
	1kg	90cm	12cm	3cm

	ROW	COLUMN	TOTAL
	12	1	12

EU MINI SBS 5X6

SAP
DISPLAY:
688783
SUPPLIER:
INNERWORKING

360°

BASIC UNIT		
Single pack (1 row)	AA	10
	AAA	12
Single pack (2 row)	AA	5
	AAA	6
9V	10	
C	5	
D	4	
SPECIALTY		
CR2032	28	
A23	10	
FLASH LIGHTS		
Average Number*	3	
CHARGERS		
Average Number*	3	

*Quantity will depend on product size.

	WEIGHT	HEIGHT	WIDTH	DEPTH
	19.3kg	125cm	50cm	42.4cm
	21.8kg	12cm	123cm	71cm

	ROW	COLUMN	TOTAL
8in 20cm	6	5	24

EU MINI SBS 7X6

SAP
DISPLAY:
688784
SUPPLIER:
INNERWORKING

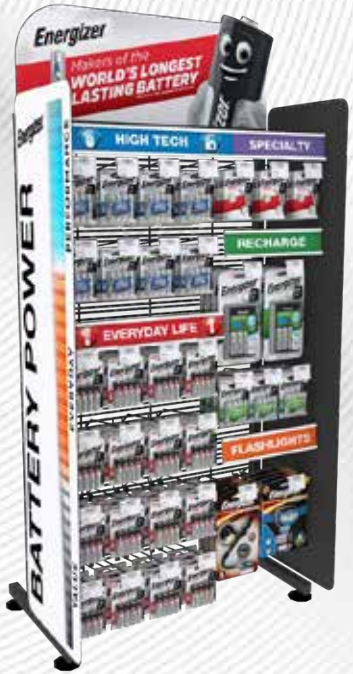

360°

BASIC UNIT		
Single pack (1 row)	AA	10
	AAA	12
Single pack (2 row)	AA	5
	AAA	6
9V	10	
C	5	
D	4	
SPECIALTY		
CR2032	28	
A23	10	
FLASH LIGHTS		
Average Number*	3	
CHARGERS		
Average Number*	3	

*Quantity will depend on product size.

	WEIGHT	HEIGHT	WIDTH	DEPTH
	23kg	125cm	70cm	42.4cm
	25.5kg	12cm	123cm	71cm

	ROW	COLUMN	TOTAL
8in 20cm	6	7	34

EU ORIGAMI 3X3 COUNTER DISPLAY

SAP
DISPLAY:
688680
SUPPLIER:
BRANDED RETAIL SOLUTIONS

360°

BASIC UNIT		
Single pack (1 row)	AA	6
	AAA	8
Single pack (2 row)	AA	3
	AAA	4
9V	6	
C	4	
D	3	
SPECIALTY		
CR2032	16	
A23	8	
Hearing Aids	12	

	WEIGHT	HEIGHT	WIDTH	DEPTH
	1.6kg	48.5cm	26.5cm	12cm
	2kg	50cm	37.5cm	2cm

	ROW	COLUMN	TOTAL
	3	3	9

EU ORIGAMI 5X2 COUNTER DISPLAY

SAP
DISPLAY:
688682
SUPPLIER:
BRANDED RETAIL SOLUTIONS

360°

BASIC UNIT		
Single pack (1 row)	AA	6
	AAA	8
Single pack (2 row)	AA	3
	AAA	4
9V	6	
C	4	
D	3	
SPECIALTY		
CR2032	16	
A23	8	
Hearing Aids	12	

	WEIGHT	HEIGHT	WIDTH	DEPTH
	1.5kg	35.5cm	26.5cm	17.5cm
	1.8kg	50cm	37.5cm	2cm

	ROW	COLUMN	TOTAL
	2	5	10

EU COUNTER ANTI THEFT POLYVALENT

SAP
DISPLAY: 688678
SUPPLIER: CCI

360°

BASIC UNIT		
Single pack (1 row)	AA	10
	AAA	14
Single pack (2 row)	AA	5
	AAA	7
9V	6	
C	4	
D	3	
SPECIALTY		
CR2032	16	
A23	8	
Hearing Aids	12	

	WEIGHT	HEIGHT	WIDTH	DEPTH
	3.6kg	63.5cm	39.5cm	25.3cm
	4.2kg	67cm	44cm	25.5cm

	ROW	COLUMN	TOTAL
13.5cm ALK	2 / 3	3/6	6/9/12
13.5cm CHG	1	2	2*

	ROW	COLUMN	TOTAL
11cm	2	2 / 3	4 / 6

*number of columns on this row depends on package size

EU COUNTER 4-6H MULTI RANGE

SAP
DISPLAY: 688677
SUPPLIER: CCI

360°

BASIC UNIT		
Single pack (1 row)	AA	8
	AAA	10
Single pack (2 row)	AA	4
	AAA	5
9V	7	
C	5	
D	4	
SPECIALTY		
CR2032	20	
A23	9	
Hearing Aids	20	

	WEIGHT	HEIGHT	WIDTH	DEPTH
	1.5kg	39cm	19.2cm	27cm
	1.7kg	32cm	20cm	28.5cm

	ROW	COLUMN	TOTAL
11cm	2	2	4

EU WATCH BOX 2 DRAWER

SAP
DISPLAY:
688618
SUPPLIER:
INNERWORKING

	WEIGHT	HEIGHT	WIDTH	DEPTH
		7.3cm	23.5cm	26.7cm
	1.8kg	12.5cm	31.5cm	28cm

360°

INSIGHT: MAIN FIXTURE

Most shoppers find the main fixture cluttered and unattractive and are uncertain about which battery to chose*

Due to lack of knowledge & information, shoppers generally make choices based on habit & price**

A clear and orchestrated shelf:

(A) DRIVES INCREMENTAL CATEGORY VALUE

& more particularly

BOOSTS PERFORMANCE ALKALINE SEGMENT***

(B) MAKES IT EASIER FOR SHOPPER TO FIND THE RIGHT PRODUCT, allows shoppers to discover products not usually considered & make it more enjoyable to shop***

*Brand potentail 3000 interview EU April 2014.
**Simpson & Carpenter Focus Groups Fr 2012.
***Affinova Quantiative reserach UK April 2014, tests in store UK 2015.

SBS MAIN FIXTURE ORGANISATION

FLEXIBLE STRUCTURE THAT CAN BE ADAPTED TO ANY PLANOGRAM.

Kits can be ordered per multiple of bays of 1.33 max (length can be reduced in store)

In each kit can be ordered:

- Header with Powerbar and Segment identification
- Communication panels
- Product glorifiers

GRAPHICS AVAILABLE FOR BATTERIES FIXTURES:

Header Panels

Recharge Panels

Info Panels

Specialty Panel

INSIGHT: SEASONAL & PROMOTIONAL

"I SAW A SPECIAL OFFER"

is one of the biggest drivers for the unplanned battery purchase*

40% OF BATTERY CATEGORY PURCHASES ARE TRIGGERED IN-STORE

i.e. not on the shopping list*

PROMOTIONAL DISPLAYS IN HIGH TRAFFIC LOCATIONS DRIVE INCREMENTAL SALES

by attracting shoppers who were not intending to visit the battery fixture*

*Brand Potential: 3000 interviews EU April 2014.

EU QUAD MAX AND MAX PLUS

UTILIZZARE I CODICI DEL BOOK DI CANVASS

360°

BASIC UNIT		LARGE	SMALL
Single Pack (1 row)	AA	6	9
	AAA	8	12
Single Pack (2 row)	AA	3	4
	AAA	4	6
9V		5	7
C		3	5
D		2	3
SPECIALTY			
CR2032		19	27
A23		7	10
CHARGERS			
Average number*		1	2

*Quantity will depend on product size.

	WEIGHT	HEIGHT	WIDTH	DEPTH
	8kg	152cm	60cm	40cm
	9kg	152cm	60cm	40cm

	LARGE SIDE (x2)	SMALL SIDE (x2)
	L: 120mm 32 hooks	L: 160mm 4-16 hooks

COMPLETE DISPLAY

BODY

HEADER

NARROW SIDE PANELS

WIDE SIDE PANELS

EU OPEN AIR 36

UTILIZZARE I CODICI DEL BOOK DI CANVASS

360°

PER DISPLAYING CELL			
BASIC UNIT			
Single pack (1 row)		AA	32
		AAA	44
Single pack (2 row)		AA	16
		AAA	22
SPECIALTY			
CR2032		40	
A23		40	

	WEIGHT	HEIGHT	WIDTH	DEPTH
	8kg	148cm	68cm	58cm
	9.6kg	135.2cm	40cm	60cm

No. of facings	36
No. of display cells	18

In case of Promotional message, you can customise the Hoodie header and follow the recommended graphical execution with Mr Energizer on the side and the right hand side space for the call to action message.

EU OPEN AIR 24

UTILIZZARE I CODICI DEL BOOK DI CANVASS

360°

PER DISPLAYING CELL			
BASIC UNIT			
Single pack (1 row)		AA	32
		AAA	44
Single pack (2 row)		AA	16
		AAA	22
SPECIALTY			
CR2032		40	
A23		40	

	WEIGHT	HEIGHT	WIDTH	DEPTH
	6kg	148cm	38cm	38cm
	7.2kg	135.2cm	40cm	40cm

No. of facings	24
No. of display cells	12

In case of Promotional message, you can customise the Hoodie header and follow the recommended graphical execution with Mr Energizer on the side and the right hand side space for the call to action message.

EU OPEN AIR 16

UTILIZZARE I CODICI DEL BOOK DI CANVASS

360°

PER DISPLAYING CELL			
BASIC UNIT			
Single pack (1 row)		AA	24
		AAA	32
Single pack (2 row)		AA	12
		AAA	16
SPECIALTY			
CR2032		32	
A23		32	

	WEIGHT	HEIGHT	WIDTH	DEPTH
	3.4kg	138.7cm	38cm	38cm
	4.2kg	122.5cm	30cm	40cm

No. of facings	16
No. of display cells	8

In case of Promotional message, you can customise the Hoodie header and follow the recommended graphical execution with Mr Energizer on the side and the right hand side space for the call to action message.

EU SPACE SAVER EVOLUTION

UTILIZZARE I CODICI DEL BOOK DI CANVASS

360°

PER DISPLAYING CELL

BASIC UNIT		
Single pack (1 row)	AA	16
	AAA	22
Single pack (2 row)	AA	8
	AAA	11
SPECIALTY		
CR2032	48	
A23	24	
Hearing Aids	48	

	WEIGHT	HEIGHT	WIDTH	DEPTH
	3.8kg	109cm	38cm	38cm
	5.8kg	88.8cm	39cm	19.5cm

No. of facings	24
No. of display cells	12

EU SQUARE KONO

SAP
DISPLAY:
688696
SUPPLIER:
SAICA

360°

BASIC UNIT		
Single pack (1 row)	AA	384
	AAA	504
Single pack (2 row)	AA	192
	AAA	252
Shrink Pack 16	AA	300
	AAA	528

	WEIGHT	HEIGHT	WIDTH	DEPTH
	4kg	140cm	38cm	38cm
	4.5kg	77.5cm	98cm	4.5cm

EU MINI COUNTER GENERIC

UTILIZZARE I CODICI DEL BOOK DI CANVASS

360°

	BASIC UNIT		
PER FACING	Single pack (1 row)	AA	12
		AAA	12
	Single pack (2 row)	AA	6
		AAA	6

	ROW	COLUMN	TOTAL
Cells	1	2	2

	WEIGHT	HEIGHT	WIDTH	DEPTH
	0.8kg	30.5cm	17.6cm	19.7cm
	1kg	15cm	19cm	22cm

POP MATERIAL

KEY VISIBILITY POP TOOLS THROUGH THE PATH TO PURCHASE

CROSS MERCHANDISING

PROMOTIONAL DISPLAYS

ON SHELF COMMUNICATION

EU EAZZY ARCH

- Composed by 2 columns and 1 header
- Foldable and automatic (with elastics)
- Footer for more stability

WEIGHT	HEIGHT	WIDTH	DEPTH
3.9kg	190cm	190cm	60cm

UTILIZZARE I CODICI DEL BOOK DI CANVASS

PROMOTIONAL DISPLAYS

360°

EU TOTEM – GOLD OPTION

- Automatic system, foldable
- Delivered in single kit box
- Footer for more stability

WEIGHT	HEIGHT	WIDTH	DEPTH
1.2kg	190cm	60cm	20cm

UTILIZZARE
I CODICI
DEL BOOK
DI CANVASS

PROMOTIONAL DISPLAYS

360°

EU BATTERY SHAPED CLESSIDRA

- With foot
- Double side header
- Self standing, to be placed behind Open Air or other floor displays

WEIGHT	HEIGHT	WIDTH	DEPTH
1.2kg	80cm	23cm	6.3cm

UTILIZZARE
I CODICI
DEL BOOK
DI CANVASS

PROMOTIONAL DISPLAYS

360°

EU MR ENERGIZER TOTEM VACCUM FORMED

WEIGHT	HEIGHT	WIDTH	DEPTH
2.2kg	155cm	68cm	9cm

UTILIZZARE
I CODICI
DEL BOOK
DI CANVASS

PROMOTIONAL DISPLAYS

360°

EU HIGHLIGHTERS

- With magnets fixation
- Adjustable length of metallic bar
- Graphic can be customised according to product ranges and languages

WEIGHT	HEIGHT	WIDTH	DEPTH
-	24cm	60cm	0.5cm

PREVIO ACCORDO CON SEDE

ON SHELF COMMUNICATION

360°

EU WOBBLERS

- Cardboard paper, laminated glossy
- Die cut
- Assembled with double tape

WEIGHT	HEIGHT	WIDTH	DEPTH
0.02kg	22cm	22cm	0.1cm

PREVIO ACCORDO CON SEDE

ON SHELF COMMUNICATION

360°

INSIGHT: LIGHTING

VISIBILITY IS KEY FOR FLASHLIGHTS CATEGORY

Shoppers expect to find flashlights in DIFFERENT LOCATIONS

- Main fixture is expected to be located NEXT TO THE BATTERIES
- Other locations LINKED TO USAGE OCCASIONS, for example*
  - Headlights in the outdoor, sport or in the hardware / DIY sections
  - Lantern in the gardening section

Brands are key to this category

- 47% shoppers are willing to pay more for brands*

Gifting opportunity to grow category sales

- 47% people would buy torches as a gift
- Ensure secondary displays capture this opportunity

*Simpson & Carpenter U&A 2013, **Kantar TNS Flashlights Omnibus Express Online, December 2017, Seasonality: scanned data GFK in EU, IRI in ANZ

EU FLASHLIGHT HOOD BOX

UTILIZZARE I CODICI DEL BOOK DI CANVASS

	Flashlight	Batteries
No. of facings	Maximum 3 pegs per row / 2 rows	Bottom Shelf

	ROW	COLUMN	TOTAL
22cm	2	3	6

	WEIGHT	HEIGHT	WIDTH	DEPTH
	3kg	122.7cm	26.5cm	53.8cm
	4.8kg	66.2cm	26.5cm	53.8cm

For filling capacity, please proceed with filling test at K&N

Energizer®